Front View

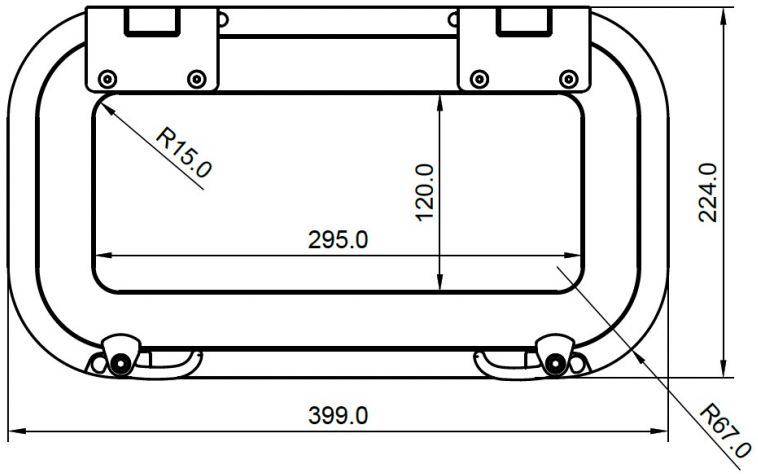

14.3 (Glass Thickness)

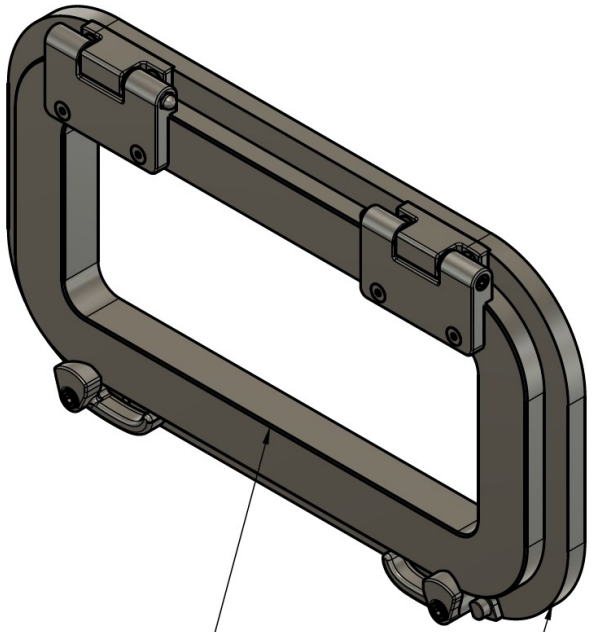

Sash Pt #: HLR-325-SASH-0000000

Frame Pt #: HLR-325-FRAME-000000

Side View

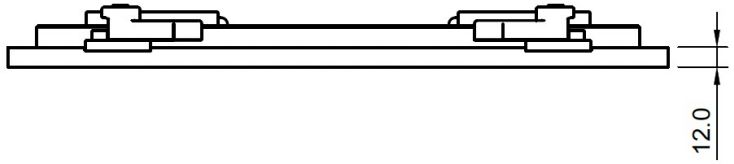

Rear View

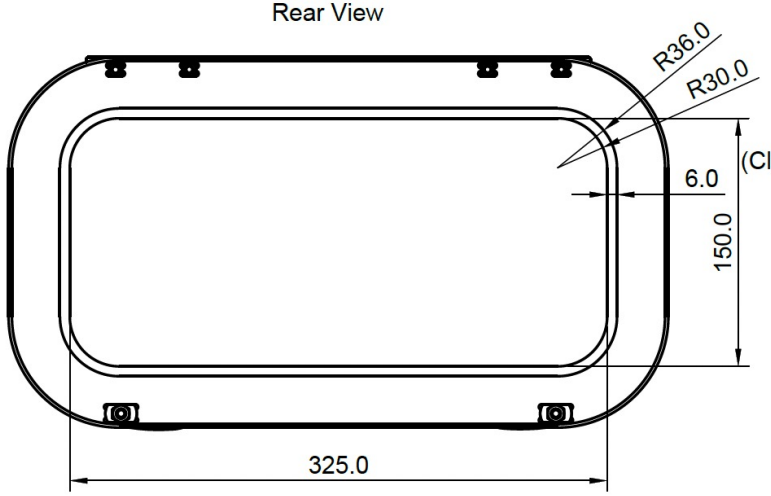

(Clearance Sash Glass to Fixed Glass)

GENERAL NOTES
1. ALL DIMENSIONS SHOWN ARE IN MILLIMETRES UNLESS OTHERWISE NOTED.
2. DO NOT SCALE FROM DRAWING.
3. ALL MATERIALS USED WILL BE QUALITY MARINE/AUTOMOTIVE GRADE.
4. IT IS THE BUILDERS RESPONSIBILITY TO CROSS-CHECK ALL DIMENSIONS & SPECIFICATIONS ON ALL RELATED PLANS. SHOULD ANY DISCREPANCY BE FOUND, THEY SHALL BE BROUGHT TO THE ATTENTION OF THE DESIGNER & RECONCILED, BEFORE ANY SUCH ITEM IS FABRICATED OR ASSEMBLED.

CAUTION
This design, including specification, drawings and its contents, are the exclusive property of ALFAB (AUST. Pty Ltd and is furnished on a confidential basis, with the expressed agreement that it will not be sold, transferred, copied, traced, photographed or reproduced in any manner whatsoever in whole or in part, nor any item hereon be built, manufactured or assembled with the aid thereof without the written agreement of ALFAB (AUST.) Pty Ltd. The recipient agrees not to disclose to any other party information herein, nor to use such information except for the specific purpose contracted for.

TITLE:	HLR-325-150	
DESCRIPTION:	General Overview	SHEET #:1/4
SCALE: 1:5	CHECKED:	APPR'D:
DATE: 1/01/2023	DRAWN: Phillip McIntosh	DWG No:

ALFAB (AUST.) P/L
AUTO-MARINE GLAZING SOLUTIONS
4 RADIUM ST CRESTMEAD, QUEENSLAND 4132, AUSTRALIA
P: +61 7 38034333 W: www.alfab.com.au E: info.qld@alfab.com.au